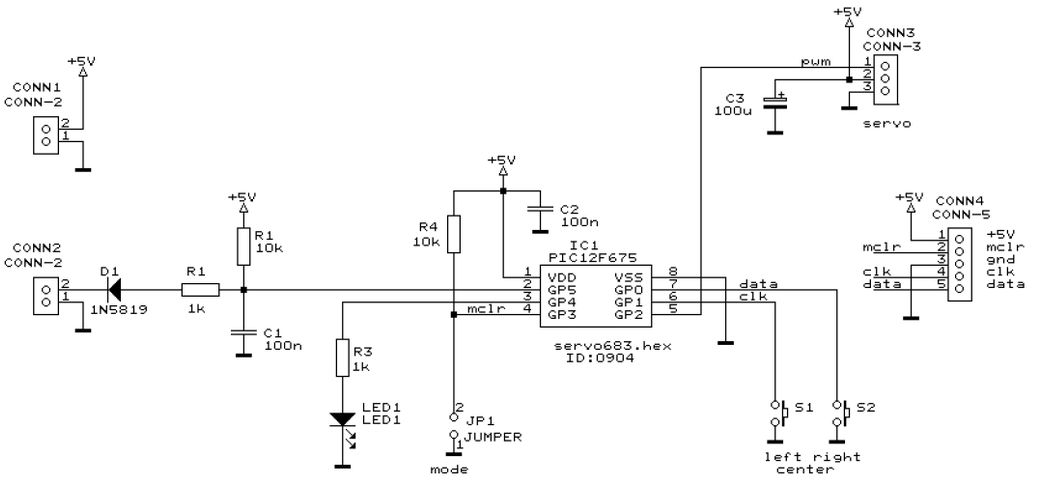

Title	servo controller	
Size A	Document Number servo683.bld	REV
Date: March 26, 2017	Sheet of	